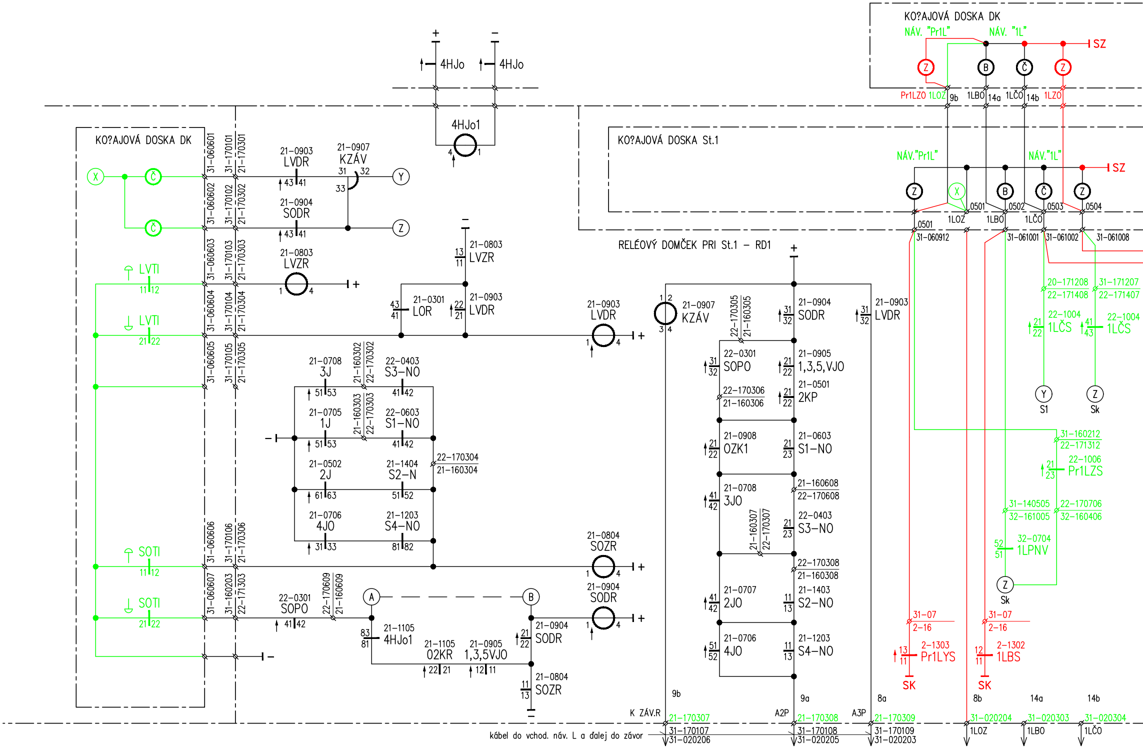
KO?AJOVÁ DOSKA DK
NÁV. "Pr1L"
NÁV. "1L"
SZ
Pr1LZO 1LOZ 9b 1LBO 14a 1LČO 14b 1LZO
4HJo
4HJo
4HJo1
KO?AJOVÁ DOSKA DK
KO?AJOVÁ DOSKA St.1
NÁV."Pr1L"
NÁV."1L"
SZ
0501 0502 0503 0504
1LOZ 1LBO 1LČO
0501
31-060912
31-061001
31-061002
31-061008
RELÉOVÝ DOMČEK PRI St.1 – RD1
31-060601 31-060602 31-060603 31-060604 31-060605 31-060606 31-060607
31-170101 31-170102 31-170103 31-170104 31-170105 31-170106 31-160203
21-170301 21-170302 21-170303 21-170304 21-170305 21-170306 22-171303
21-0903 LVDR
21-0907 KZÁV
21-0904 SODR
21-0803 LVZR
LVTI
SOTI
21-0803 LVZR
21-0301 LOR
21-0903 LVDR
21-0708 3J
21-0705 1J
21-0502 2J
21-0706 4JO
22-0403 S3-NO
22-0603 S1-NO
21-1404 S2-N
21-1203 S4-NO
21-160302 22-170302
21-160303 22-170303
22-170304 21-160304
21-0804 SOZR
21-0904 SODR
22-0301 SOPO
22-170609 21-160609
21-1105 4HJo1
21-1105 02KR
21-0905 1,3,5VJO
21-0804 SOZR
21-0907 KZÁV
22-170305 21-160305
21-0904 SODR
21-0903 LVDR
22-0301 SOPO
21-0905 1,3,5,VJO
22-170306 21-160306
21-0501 2KP
21-0908 OZK1
21-0603 S1-NO
21-0708 3JO
21-160608 22-170608
22-0403 S3-NO
21-160307 22-170307
22-170308 21-160308
21-0707 2JO
21-1403 S2-NO
21-0706 4JO
21-1203 S4-NO
20-171208 22-171408
21-171207 22-171407
22-1004 1LČS
22-1004 1LČS
S1 Sk
31-160212 22-171312
22-1006 Pr1LZS
31-140505 32-161005
22-170706 32-160406
32-0704 1LPNV
Sk
31-07 2-16
2-1303 Pr1LYS
31-07 2-16
2-1302 1LBS
SK SK
9b 9a 8a 8b 14a 14b
K ZÁV.R A2P A3P
21-170307 31-170107 31-020206
21-170308 31-170108 31-020205
21-170309 31-170109 31-020203
31-020204 1LOZ
31-020303 1LBO
31-020304 1LČO
kábel do vchod. náv. L a ďalej do závor

– indikácie z návestidla 2L sa preložia do návestidla 1L,
– návestidlo 2L sa pre tento stavebný postup na ko?ajových doskách prelepí,
– zapojenie indikácií návestidla 1L sa využije v ďalších stavebných postupoch.

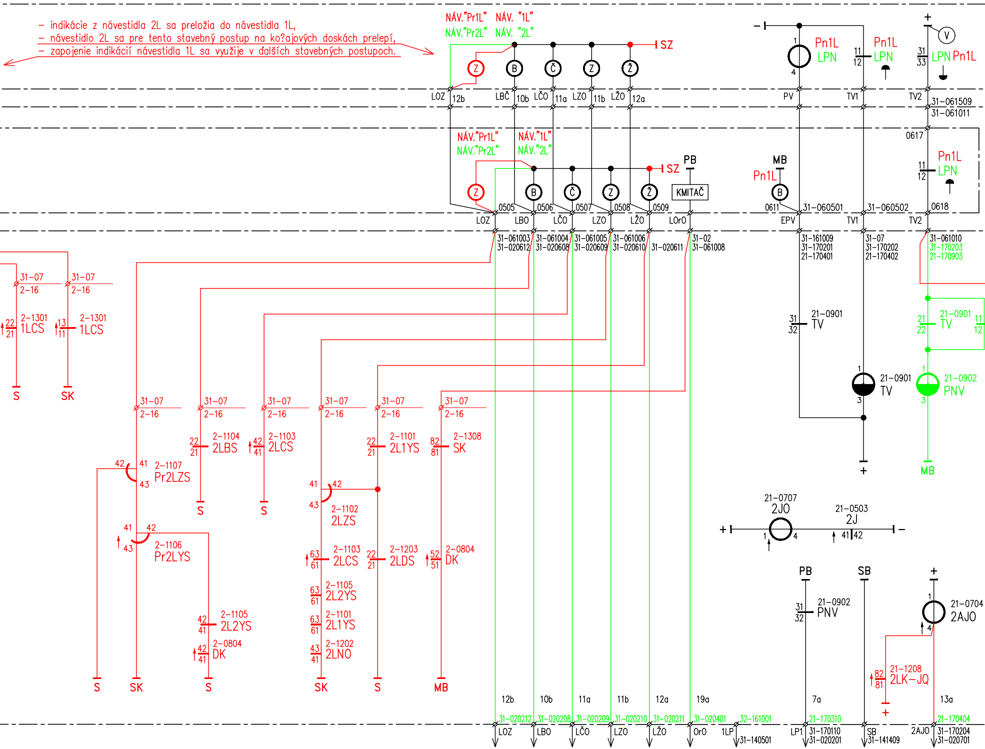
NÁV."Pr1L" NÁV. "1L"
NÁV."Pr2L" NÁV. "2L"
SZ
Z
B
Č
Z
Ž
LOZ 12b
LBČ 10b
LČO 11a
LZO 11b
LŽO 12a
NÁV."Pr1L"
NÁV."Pr2L"
NÁV."1L"
NÁV."2L"
SZ
PB
KMITAČ
0505
0506
0507
0508
0509
LOZ
LBO
LČO
LZO
LŽO
LOrO
31–061003
31–020612
31–061004
31–020608
31–061005
31–020609
31–061006
31–020610
31–020611
31–02
31–061008
Pn1L
LPN
PV
TV1
TV2
31–061509
31–061011
0617
MB
Pn1L
B
0611
EPV
31–060501
31–060502
0618
31–161009
31–170201
21–170401
31–07
31–170202
21–170402
31–061010
31–170203
21–170903
21–0901
TV
21–0902
PNV
MB
31–07
2–16
2–1301
1LCS
S
SK
2–1107
Pr2LZS
2–1106
Pr2LYS
2–1104
2LBS
2–1103
2LCS
2–1102
2LZS
2–1101
2L1YS
2–1308
SK
2–1105
2L2YS
2–0804
DK
2–1203
2LDS
2–1202
2LNO
21–0707
2JO
21–0503
2J
PB
SB
21–0902
PNV
21–0704
2AJO
21–1208
2LK–JQ
12b 10b 11a 11b 12a 19a 7a 13a
31–020212
31–020208
31–020209
31–020210
31–020211
31–020401
32–161001
21–170310
21–170404
LOZ
LBO
LČO
LZO
LŽO
OrO
1LP
31–140501
LP1
31–170110
31–020201
SB
31–141409
2AJO
31–170204
31–020701

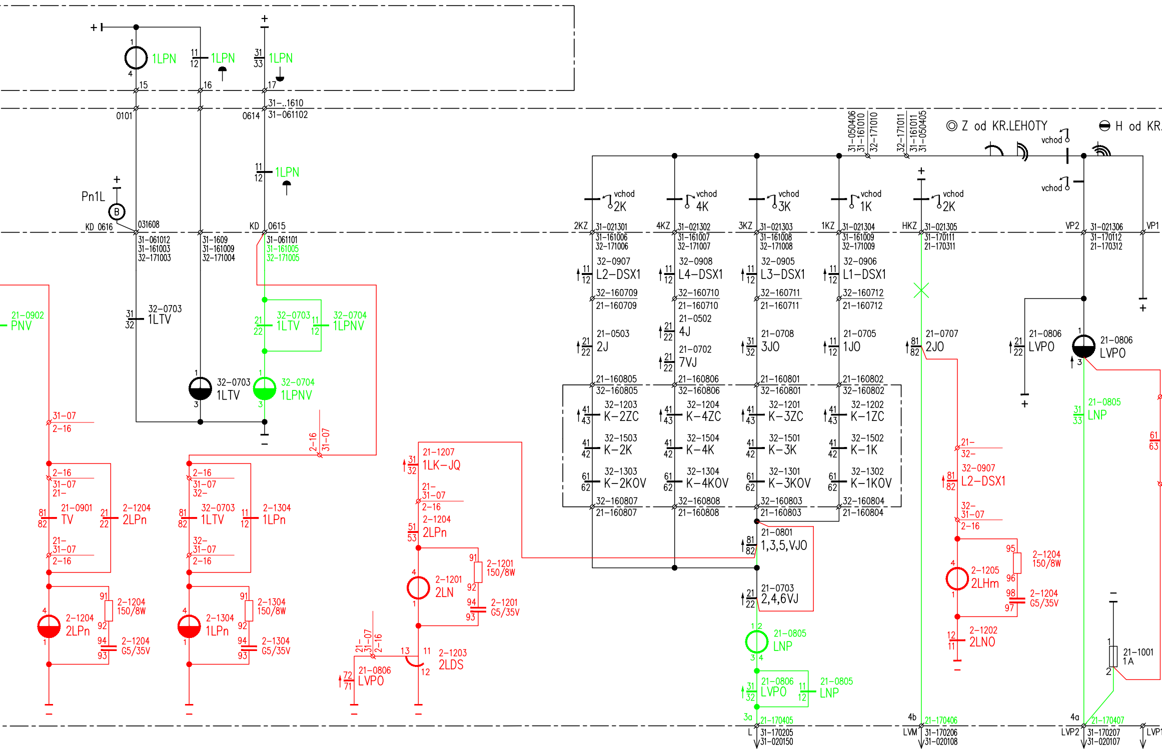
1LPN
1LPN
1LPN
15
16
17
0101
0614
31–..1610
31–061102
1LPN
Pn1L
B
KD 0616
031608
KD
0615
31–061012
31–161003
32–171003
31–1609
31–161009
32–171004
31–061101
31–161005
32–171005
Z od KR.LEHOTY
H od KR.
vchod
2K
4K
3K
1K
2K
2KZ
4KZ
3KZ
1KZ
HKZ
VP2
VP1
31–021301
31–021302
31–021303
31–021304
31–021305
31–021306
31–050406
31–161010
32–171010
32–171011
31–161011
31–050405
32–0907 L2–DSX1
32–0908 L4–DSX1
32–0905 L3–DSX1
32–0906 L1–DSX1
21–0902 PNV
32–0703 1LTV
32–0703 1LTV
32–0704 1LPNV
32–0703 1LTV
32–0704 1LPNV
21–0503 2J
21–0502 4J
21–0702 7VJ
21–0708 3JO
21–0705 1JO
21–0707 2JO
21–0806 LVPO
21–0806 LVPO
32–1203 K–2ZC
32–1204 K–4ZC
32–1201 K–3ZC
32–1202 K–1ZC
32–1503 K–2K
32–1504 K–4K
32–1501 K–3K
32–1502 K–1K
32–1303 K–2KOV
32–1304 K–4KOV
32–1301 K–3KOV
32–1302 K–1KOV
21–0801 1,3,5,VJO
21–0703 2,4,6VJ
21–0805 LNP
21–0806 LVPO
21–0805 LNP
21–0805 LNP
21–1207 1LK–JQ
2–1204 2LPn
2–1201 2LN
2–1201 150/8W
2–1201 G5/35V
2–1203 2LDS
21–0806 LVPO
21–0901 TV
2–1204 2LPn
2–1204 2LPn
2–1204 150/8W
2–1204 G5/35V
32–0703 1LTV
2–1304 1LPn
2–1304 1LPn
2–1304 150/8W
2–1304 G5/35V
32–0907 L2–DSX1
2–1205 2LHm
2–1204 150/8W
2–1204 G5/35V
2–1202 2LNO
21–1001 1A
31–07
2–16
21–
32–
21–170405
21–170406
21–170407
L
LVM
LVP2
LVP1
31–170205
31–020150
31–170206
31–020108
31–170207
31–020107
3a
4b
4a

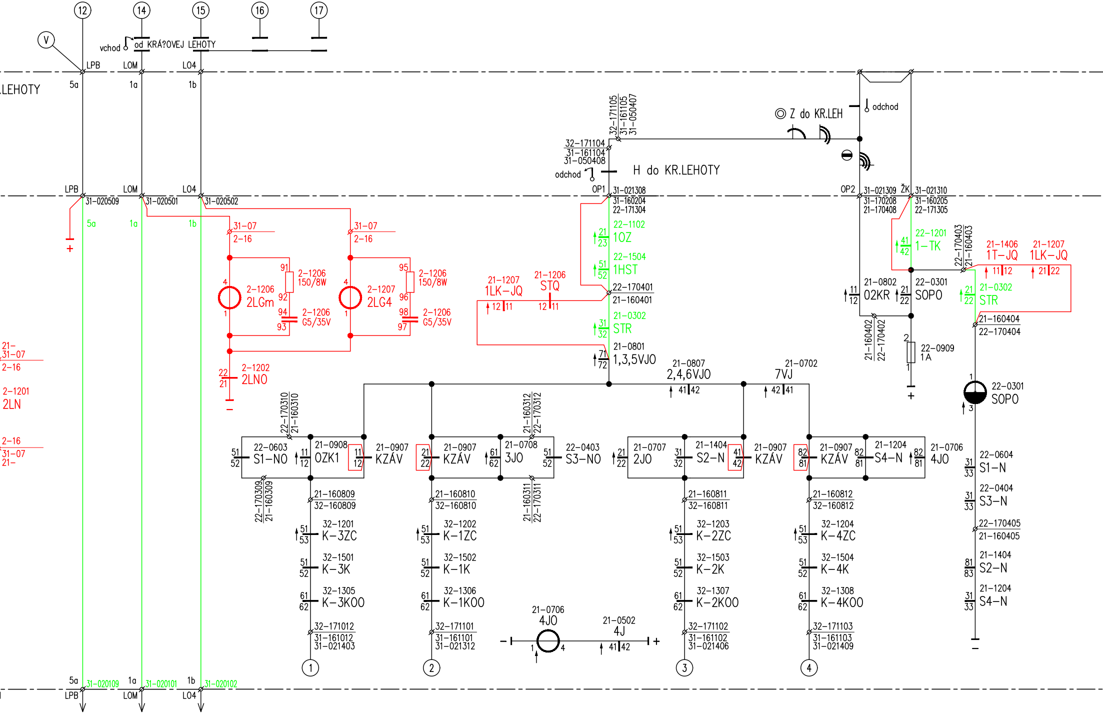

12
14
15
16
17
V
vchod
od KRÁ?OVEJ LEHOTY
LPB
LOM
LO4
5a
1a
1b
.LEHOTY
31-020509
31-020501
31-020502
31-07
2-16
2-1206
150/8W
2-1206
2LGm
2-1206
G5/35V
2-1207
2LG4
2-1202
2LNO
21-
31-07
2-16
2-1201
2LN
2-16
31-07
21-
32-171105
31-161105
31-050407
32-171104
31-161104
31-050408
odchod
H do KR.LEHOTY
OP1
31-021308
31-160204
22-171304
22-1102
1OZ
22-1504
1HST
22-170401
21-160401
21-0302
STR
21-0801
1,3,5VJO
21-1207
1LK-JQ
21-1206
STQ
Z do KR.LEH
odchod
OP2
31-021309
31-170208
21-170408
ŽK
31-021310
31-160205
22-171305
22-1201
1-TK
22-170403
21-160403
21-1406
1T-JQ
21-1207
1LK-JQ
21-0802
02KR
22-0301
SOPO
21-0302
STR
21-160404
22-170404
21-160402
22-170402
22-0909
1A
22-0301
SOPO
21-0807
2,4,6VJO
21-0702
7VJ
22-170310
21-160310
22-0603
S1-NO
21-0908
OZK1
21-0907
KZÁV
21-0907
KZÁV
21-0708
3JO
21-160312
22-170312
22-0403
S3-NO
21-0707
2JO
21-1404
S2-N
21-0907
KZÁV
21-0907
KZÁV
21-1204
S4-N
21-0706
4JO
22-0604
S1-N
22-0404
S3-N
22-170405
21-160405
21-1404
S2-N
21-1204
S4-N
22-170309
21-160309
21-160311
22-170311
21-160809
32-160809
32-1201
K-3ZC
32-1501
K-3K
32-1305
K-3KOO
32-171012
31-161012
31-021403
21-160810
32-160810
32-1202
K-1ZC
32-1502
K-1K
32-1306
K-1KOO
32-171101
31-161101
31-021312
21-0706
4JO
21-0502
4J
21-160811
32-160811
32-1203
K-2ZC
32-1503
K-2K
32-1307
K-2KOO
32-171102
31-161102
31-021406
21-160812
32-160812
32-1204
K-4ZC
32-1504
K-4K
32-1308
K-4KOO
32-171103
31-161103
31-021409
1
2
3
4
31-020109
31-020101
31-020102

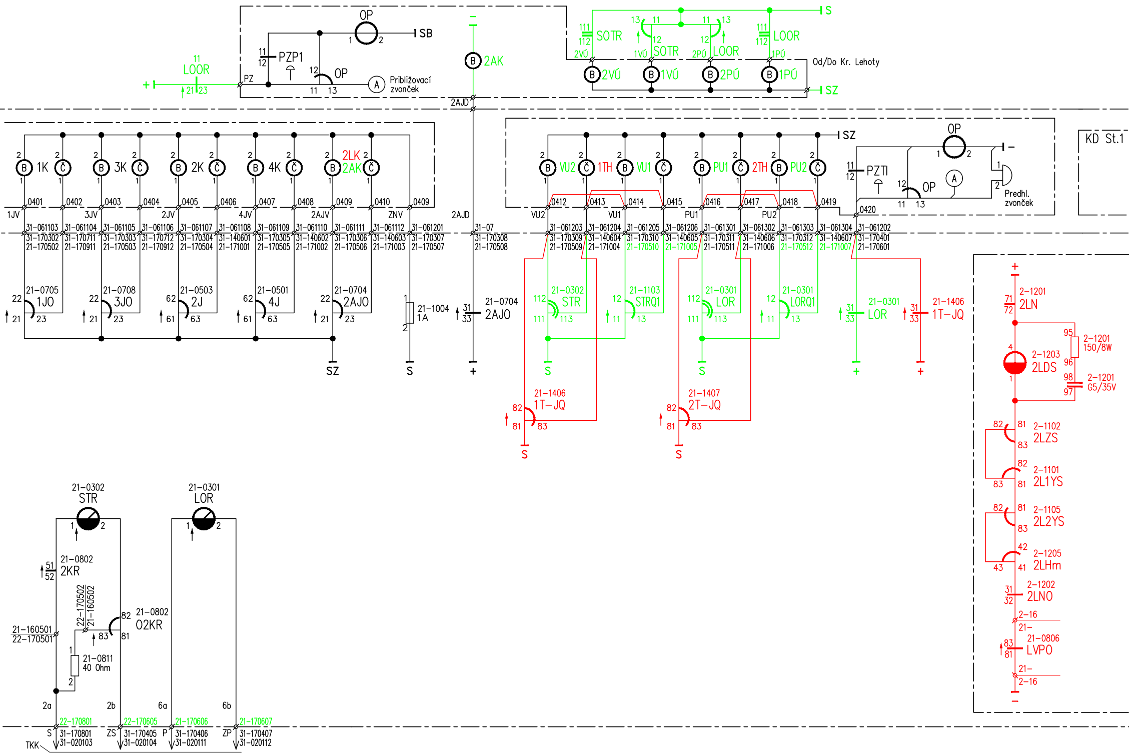

OP
SB
PZP1
11
12
OP
Približovací zvonček
LOOR
21
23
PZ
2AK
2AJD
SOTR
LOOR
2VÚ
1VÚ
2PÚ
1PÚ
S
SZ
Od/Do Kr. Lehoty
1K
3K
2K
4K
2LK
2AK
1JV
3JV
2JV
4JV
2AJV
ZNV
0401
0402
0403
0404
0405
0406
0407
0408
0409
0410
0409
31–061103
31–061104
31–061105
31–061106
31–061107
31–061108
31–061109
31–061110
31–061111
31–061112
31–061201
21–0705
1JO
21–0708
3JO
21–0503
2J
21–0501
4J
21–0704
2AJO
21–1004
1A
21–0704
2AJO
SZ
S
+
VU2
1TH
VU1
PU1
2TH
PU2
0412
0413
0414
0415
0416
0417
0418
0419
0420
PZTl
OP
Predhl. zvonček
KD St.1
21–0302
STR
21–1103
STRQ1
21–0301
LOR
21–0301
LORQ1
21–0301
LOR
21–1406
1T–JQ
21–1407
2T–JQ
2–1201
2LN
2–1201
150/8W
2–1203
2LDS
2–1201
G5/35V
2–1102
2LZS
2–1101
2L1YS
2–1105
2L2YS
2–1205
2LHm
2–1202
2LNO
2–16
21–0806
LVPO
21–0302
STR
21–0301
LOR
21–0802
2KR
21–0802
02KR
21–0811
40 Ohm
21–160501
22–170501
22–170502
21–160502
2a
2b
6a
6b
22–170801
22–170605
21–170606
21–170607
31–170801
31–020103
31–170405
31–020104
31–170406
31–020111
31–170407
31–020112
TKK
ZS
P
ZP

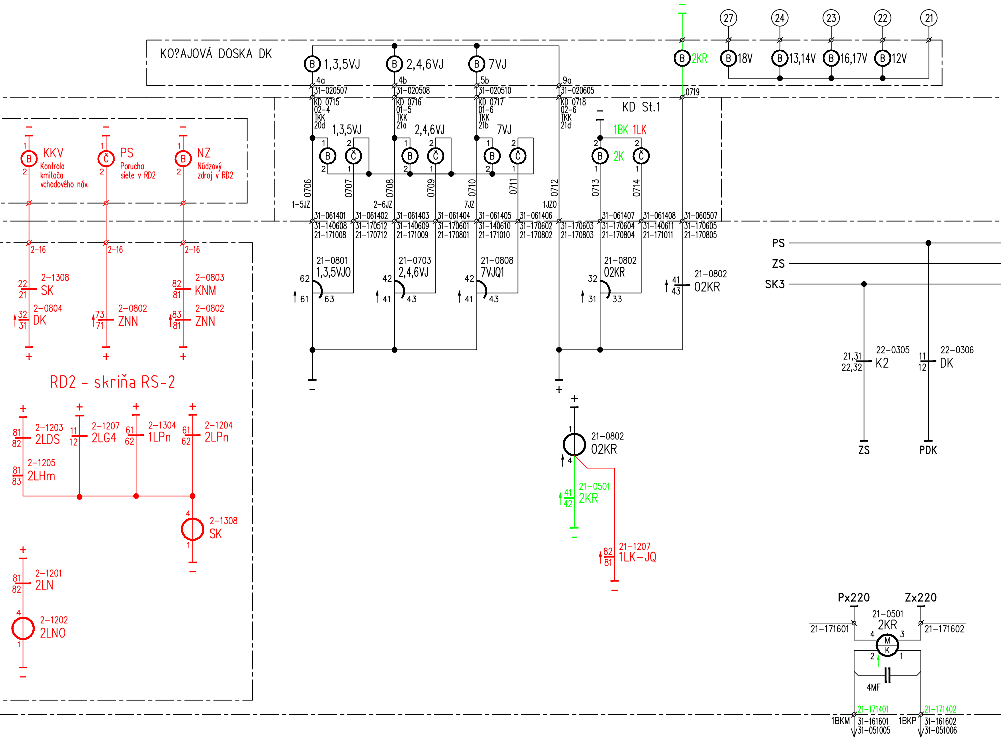
KO?AJOVÁ DOSKA DK
1,3,5VJ
2,4,6VJ
7VJ
2KR
18V
13,14V
16,17V
12V
27
24
23
22
21
4a
31-020507
4b
31-020508
5b
31-020510
9a
31-020605
0719
KD 0715
02-4
TKK
20d
KD 0716
01-5
TKK
21a
KD 0717
01-6
TKK
21b
KD 0718
02-6
TKK
21d
KD St.1
1BK 1LK
2K
KKV
Kontrola
kmitača
vchodového náv.
PS
Porucha
siete v RD2
NZ
Núdzový
zdroj v RD2
0706
0707
0708
0709
0710
0711
0712
0713
0714
1-5JZ
2-6JZ
7JZ
1JZO
31-061401
31-140608
21-171008
31-061402
31-170512
21-170712
31-061403
31-140609
21-171009
31-061404
31-170601
21-170801
31-061405
31-140610
21-171010
31-061406
31-170602
21-170802
31-170603
21-170803
31-061407
31-170604
21-170804
31-061408
31-140611
21-171011
31-060507
31-170605
21-170805
2-16
2-1308
SK
2-0804
DK
2-0802
ZNN
2-0803
KNM
21-0801
1,3,5VJO
21-0703
2,4,6VJ
21-0808
7VJQ1
21-0802
02KR
PS
ZS
SK3
22-0305
K2
22-0306
DK
21,31
22,32
ZS
PDK
RD2 - skriňa RS-2
2-1203
2LDS
2-1207
2LG4
2-1304
1LPn
2-1204
2LPn
2-1205
2LHm
2-1308
SK
2-1201
2LN
2-1202
2LNO
21-0802
02KR
21-0501
2KR
21-1207
1LK-JQ
Px220
Zx220
21-0501
2KR
21-171601
21-171602
M
K
4MF
21-171401
21-171402
1BKM
31-161601
31-051005
1BKP
31-161602
31-051006

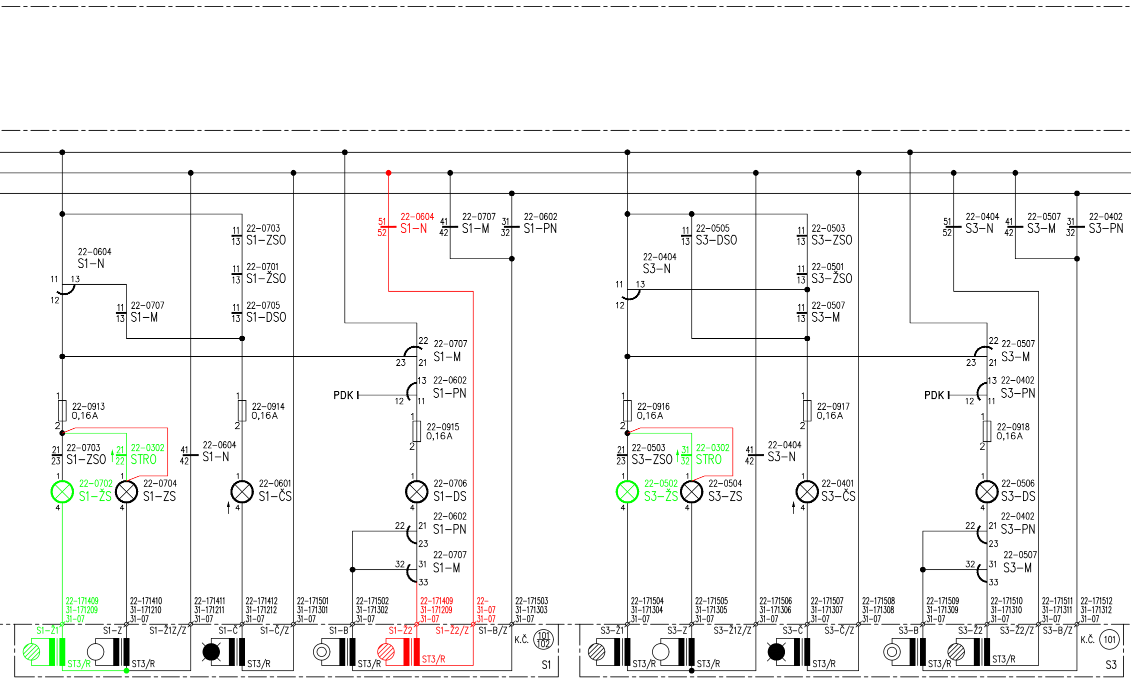
22-0604
S1-N
22-0707
S1-M
22-0602
S1-PN
22-0703
S1-ZSO
22-0701
S1-ŽSO
22-0705
S1-DSO
22-0707
S1-M
22-0707
S1-M
22-0602
S1-PN
PDK
22-0913
0,16A
22-0914
0,16A
22-0915
0,16A
22-0703
S1-ZSO
22-0302
STRO
22-0604
S1-N
22-0702
S1-ŽS
22-0704
S1-ZS
22-0601
S1-ČS
22-0706
S1-DS
22-0602
S1-PN
22-0707
S1-M
22-171409
31-171209
31-07
22-171410
31-171210
31-07
22-171411
31-171211
31-07
22-171412
31-171212
31-07
22-171501
31-171301
31-07
22-171502
31-171302
31-07
22-171409
31-171209
31-07
22-
31-07
31-07
22-171503
31-171303
31-07
S1-Ž1
S1-Z
S1-Ž1Z/Z
S1-Č
S1-Č/Z
S1-B
S1-Ž2
S1-Ž2/Z
S1-B/Z
K.Č.
101
102
ST3/R
S1
22-0505
S3-DSO
22-0503
S3-ZSO
22-0404
S3-N
22-0501
S3-ŽSO
22-0507
S3-M
22-0404
S3-N
22-0507
S3-M
22-0402
S3-PN
22-0507
S3-M
22-0402
S3-PN
PDK
22-0916
0,16A
22-0917
0,16A
22-0918
0,16A
22-0503
S3-ZSO
22-0302
STRO
22-0404
S3-N
22-0502
S3-ŽS
22-0504
S3-ZS
22-0401
S3-ČS
22-0506
S3-DS
22-0402
S3-PN
22-0507
S3-M
22-171504
31-171304
31-07
22-171505
31-171305
31-07
22-171506
31-171306
31-07
22-171507
31-171307
31-07
22-171508
31-171308
31-07
22-171509
31-171309
31-07
22-171510
31-171310
31-07
22-171511
31-171311
31-07
22-171512
31-171312
31-07
S3-Ž1
S3-Z
S3-Ž1Z/Z
S3-Č
S3-Č/Z
S3-B
S3-Ž2
S3-Ž2/Z
S3-B/Z
K.Č.
101
ST3/R
S3

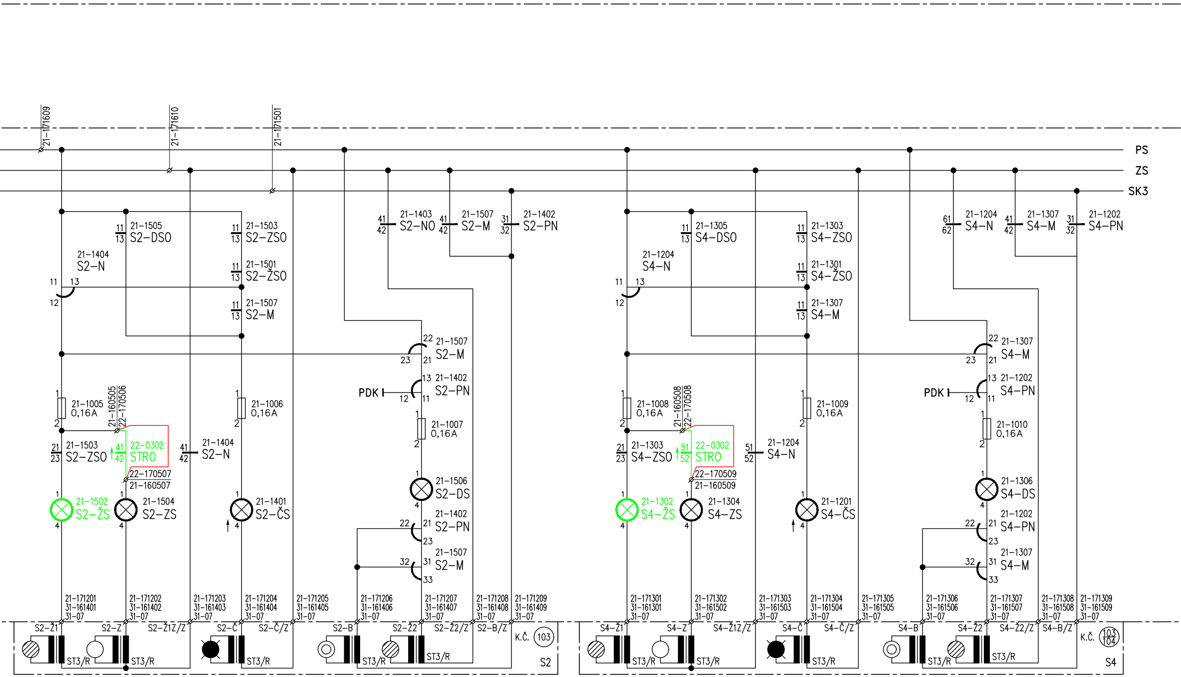
21-171609
21-171610
21-171501
PS
ZS
SK3
21-1505
S2-DSO
21-1503
S2-ZSO
21-1403
S2-NO
21-1507
S2-M
21-1402
S2-PN
21-1404
S2-N
21-1501
S2-ŽSO
21-1507
S2-M
21-1507
S2-M
21-1402
S2-PN
PDK
21-1005
0,16A
21-1006
0,16A
21-1007
0,16A
21-160505
22-170506
21-1503
S2-ZSO
22-0302
STRO
21-1404
S2-N
22-170507
21-160507
21-1506
S2-DS
21-1502
S2-ŽS
21-1504
S2-ZS
21-1401
S2-ČS
21-1402
S2-PN
21-1507
S2-M
21-171201
31-161401
31-07
21-171202
31-161402
31-07
21-171203
31-161403
31-07
21-171204
31-161404
31-07
21-171205
31-161405
31-07
21-171206
31-161406
31-07
21-171207
31-161407
31-07
21-171208
31-161408
31-07
21-171209
31-161409
31-07
S2-Ž1
S2-Z
S2-Ž1Z/Z
S2-Č
S2-Č/Z
S2-B
S2-Ž2
S2-Ž2/Z
S2-B/Z
ST3/R
K.Č.
103
S2
21-1305
S4-DSO
21-1303
S4-ZSO
21-1204
S4-N
21-1307
S4-M
21-1202
S4-PN
21-1204
S4-N
21-1301
S4-ŽSO
21-1307
S4-M
21-1307
S4-M
21-1202
S4-PN
PDK
21-1008
0,16A
21-1009
0,16A
21-1010
0,16A
21-160508
22-170508
21-1303
S4-ZSO
22-0302
STRO
21-1204
S4-N
22-170509
21-160509
21-1306
S4-DS
21-1302
S4-ŽS
21-1304
S4-ZS
21-1201
S4-ČS
21-1202
S4-PN
21-1307
S4-M
21-171301
31-161301
31-07
21-171302
31-161502
31-07
21-171303
31-161503
31-07
21-171304
31-161504
31-07
21-171305
31-161505
31-07
21-171306
31-161506
31-07
21-171307
31-161507
31-07
21-171308
31-161508
31-07
21-171309
31-161509
31-07
S4-Ž1
S4-Z
S4-Ž1Z/Z
S4-Č
S4-Č/Z
S4-B
S4-Ž2
S4-Ž2/Z
S4-B/Z
ST3/R
K.Č.
103/104
S4

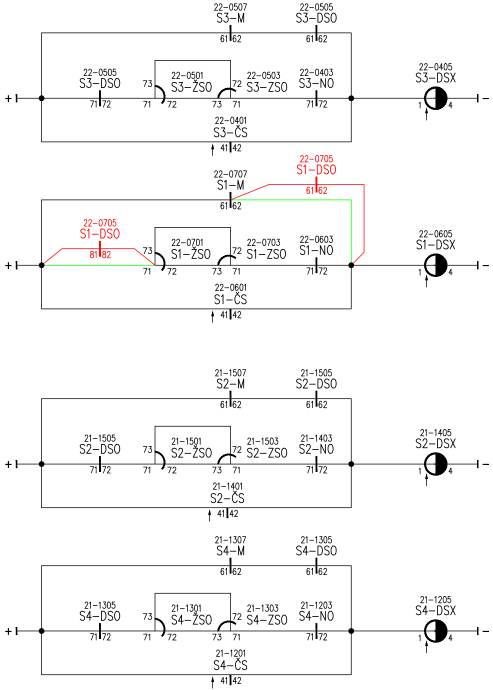
22–0507
S3–M
61 62
22–0505
S3–DSO
61 62
22–0505
S3–DSO
71 72
73
22–0501
S3–ŽSO
71 72
73 72
71
22–0503
S3–ZSO
22–0403
S3–NO
71 72
22–0401
S3–ČS
41 42
22–0405
S3–DSX
1 4
+
–
22–0705
S1–DSO
61 62
22–0707
S1–M
61 62
22–0705
S1–DSO
81 82
73
22–0701
S1–ŽSO
71 72
73 72
71
22–0703
S1–ZSO
22–0603
S1–NO
71 72
22–0601
S1–ČS
41 42
22–0605
S1–DSX
1 4
+
–
21–1507
S2–M
61 62
21–1505
S2–DSO
61 62
21–1505
S2–DSO
71 72
73
21–1501
S2–ŽSO
71 72
73 72
71
21–1503
S2–ZSO
21–1403
S2–NO
71 72
21–1401
S2–ČS
41 42
21–1405
S2–DSX
1 4
+
–
21–1307
S4–M
61 62
21–1305
S4–DSO
61 62
21–1305
S4–DSO
71 72
73
21–1301
S4–ŽSO
71 72
73 72
71
21–1303
S4–ZSO
21–1203
S4–NO
71 72
21–1201
S4–ČS
41 42
21–1205
S4–DSX
1 4
+
–

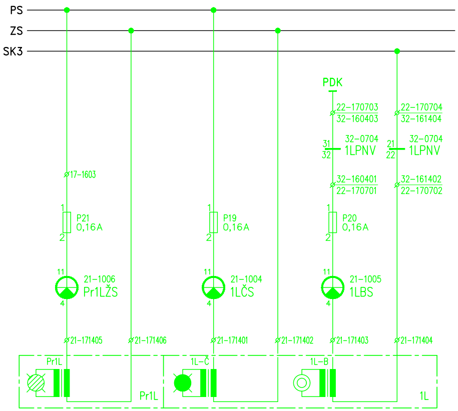
PS
ZS
SK3
PDK
22–170703
32–160403
22–170704
32–161404
31
32
32–0704
1LPNV
21
22
32–0704
1LPNV
32–160401
22–170701
32–161402
22–170702
17–1603
1
2
P21
0,16A
1
2
P19
0,16A
1
2
P20
0,16A
11
4
21–1006
Pr1LŽS
11
4
21–1004
1LČS
11
4
21–1005
1LBS
21–171405
21–171406
21–171401
21–171402
21–171403
21–171404
PrL
PrL
1L–Č
1L–B
1L

POZNÁMKA:

🟥 - nové prvky a spoje

🟩 - rušené prvky a spoje

PS,SO: PS 408-21-04 Žst. Liptovský Hrádok, zabezpečenie st. postupov		3.9
Príloha: Úprava principiálnej schémy St.1 - SP1		